1852804
Gallery Corner Table

Parts and Hardware List

A.	Top Assembly	1 pc
B.	Shelf Assembly	1 pc
C.	Left Front Leg	1 pc
D.	Right Front Leg	1 pc
E.	Back Leg	1 pc
F.	Allen Head Bolts	6 pcs
G.	Lock Washers	6 pcs
H.	Flat Washers	6 pcs
I.	Allen Head Wrench	1 pc

* Please make sure that you have all the parts and hardware indicated above before you begin assembly of this item.
* Use the hardware illustrations to determine correct piece and size.
* This item should be assembled on a soft surface to prevent scratching the finish during assembly.
* This item may require periodic tightening.

Hardware Illustrations

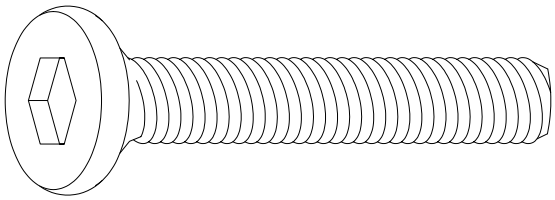

F. Allen Head Bolt

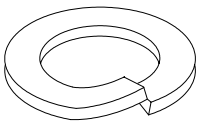

G. Lock Washer

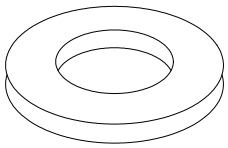

H. Flat Washer

1852804
Gallery Corner Table

Assembly Instructions

Parts required

A.	Top Assembly	1 pc	F.	Allen Head Bolts	6 pcs
B.	Shelf Assembly	1 pc	G.	Lock Washers	6 pcs
C.	Left Front Leg	1 pc	H.	Flat Washers	6 pcs
D.	Right Front Leg	1 pc	I.	Allen Head Wrench	1 pc
E.	Back Leg	1 pc			
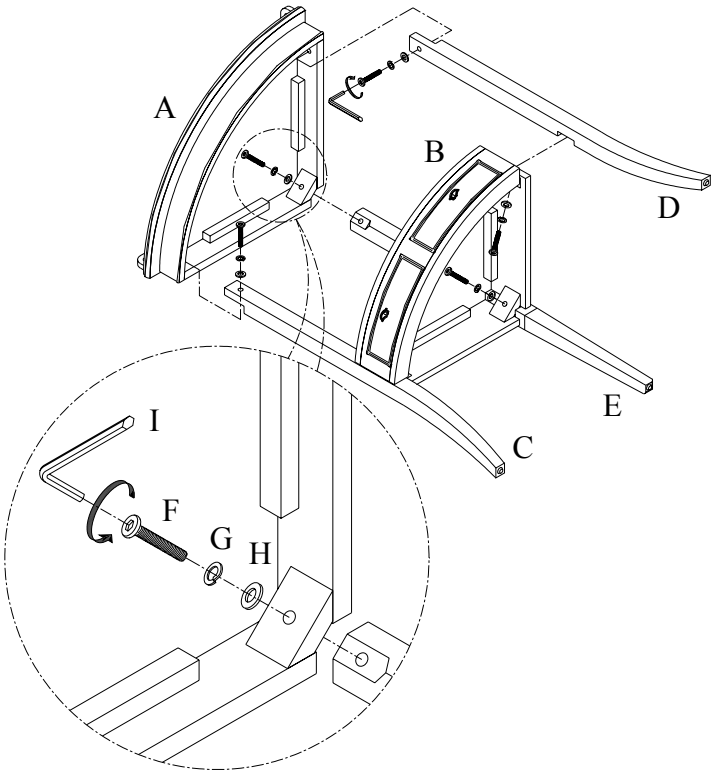
1. **Attach Shelf Assembly (B)** Place Shelf Assembly (B) on one side on a soft surface. Align the pre-drilled holes in the corner brackets of Shelf Assembly (B) with the pre-threaded holes in the grooves of the Left Front Leg (C), Right Front Leg (D) and Back Leg (E). Secure with Allen Head Bolts (F), Lock Washers (G) and Flat Washers (H) using Allen Head Wrench (I). See illustration.
2. **Attach Top Assembly (A)** Align the pre-threaded hole in Back Leg (E) with pre-drilled hole in the corner bracket of Top Assembly (A). Align the pre-threaded holes in the apron of Top Assembly (A) with the pre-drilled holes in the Left Front Leg (C) and Right Front Leg (D). Secure with Allen Head Bolts (F), Lock Washers (G) and Flat Washers (H) using Allen Head Wrench (I). See illustration.